2.4 Clutch B

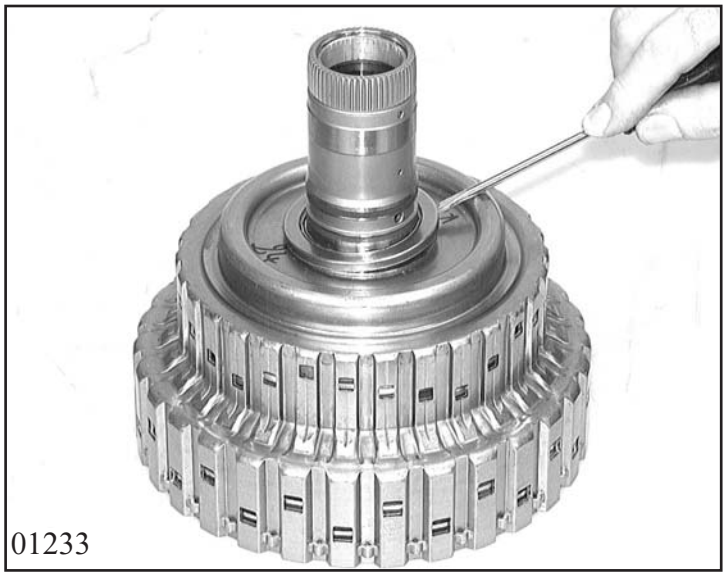
01233

Unclip needle roller bearing from clutch B carrier.

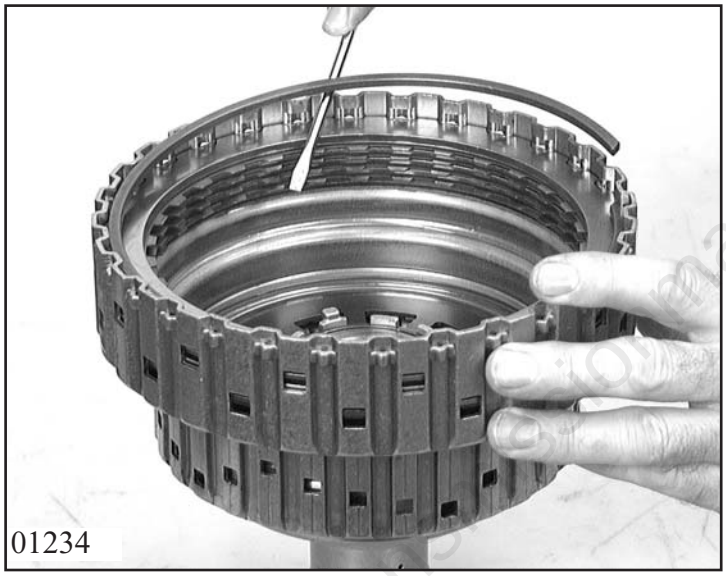
01234

Turn cylinder by 180°, take out clutch B snap ring and take out the complete clutch pack.

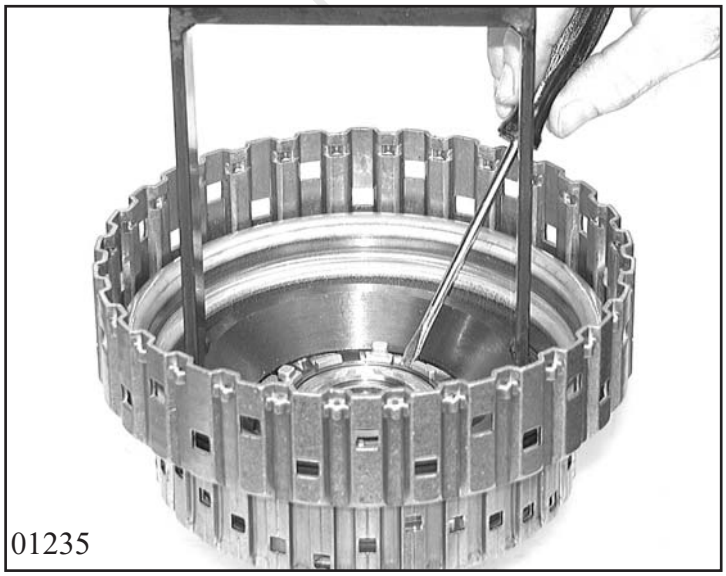
01235

Press down cup spring B in the mandrel press with assembly bracket 5x46 002 566 and take out the snap ring. Remove washer and cup spring.

Transmissionmanuals.com

Lever out the snap ring.
Cover one of the two oil guide bores and press out the piston with the air sensor plate using pressurized air.
Pull 1 O-ring seal off air sensor plate and 2 O-ring seals off piston.
Pull 2 cylindrical rings off shaft.

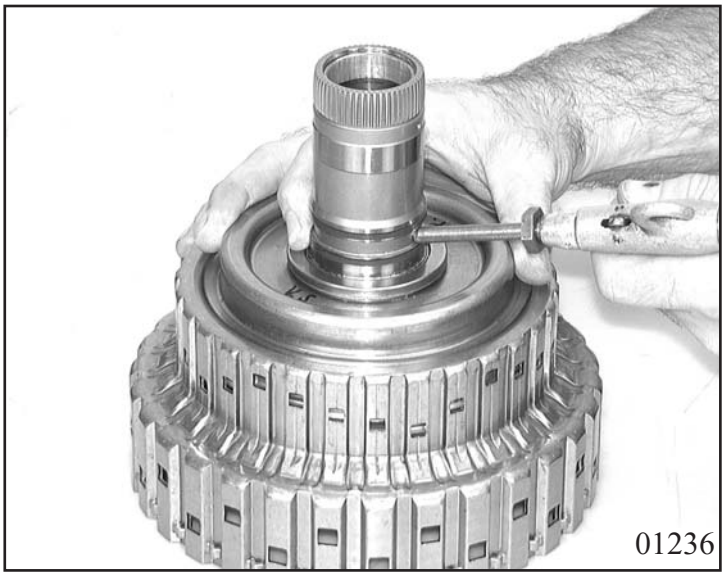

Transmissionmanuals.com